Service & maintenance

General guidance

Simple maintenance routines reduce life cycle costs

All Allegion products are designed and manufactured to require the lowest possible levels of routine maintenance.

However, it is recognised that the working life of nearly all door hardware items will be significantly reduced if basic maintenance procedures are not carried out, especially where items are subject to relatively high levels of use. In addition, European standards specifically recommend that certain maintenance routines should be carried out at designated intervals in order to ensure that there is no breach of Health & Safety requirements.

The maintenance routines contained in the following pages are recommended on the understanding that all standard Bills of Quantity inclusions such as easing, adjusting and where required, lubrication of door hardware items have been carried out as necessary to ensure correct operation of any component.

For further information on the aftercare of Allegion products please contact our Customer Care Team on:

Introduction to maintenance

The condition of doors and their hardware within a building is more than simply a cosmetic consideration. The safety and security of the building and its occupants can be seriously jeopardised if doors, especially those which form part of the building's fire escape route or fire integrity, are not operating effectively. Doors designated as being on a fire route exit or fire or smoke resistant doors have to be periodically inspected to make sure that they meet the same standards as when they were originally installed.

Both The Workplace (Health, Safety and Welfare) Regulations 1992 and the Fire Precautions (Workplace) Regulations 1997 contain requirements on the safety of doors and also require that any system capable of developing dangerous faults are subject to a suitable system of maintenance. This implies among other things that maintenance is carried out regularly, that defects are remedied and suitable records kept.

General guidance

The recommendations provided within this document offer general guidance. The type and application of doors is numerous and vary accordingly so each door will need to be treated as the case dictates. Much will depend on how the door is utilised and where it is installed. For example:

- External doors will need to be checked for any seasonal changes.
- Applications in severe atmospheric conditions will need additional consideration e.g coastal locations or swimming pool applications.
- Whilst many final emergency exit doors may be used very infrequently, those used for example as staff 'smoke break' exits may be subject to high usage.
- Internal fire resisting doors are equally important as final exit doors but may well have completely different hardware fitted to them.
- Vandalism and abuse will cause the majority of problems, so such applications may need to be checked more regularly than otherwise indicated.

The onus is on the building owner/employer/occupier to ensure that the maintenance routine is carried out and that:

- The work is carried out by suitably proficient individuals
- Any remedial work is carried out immediately, especially on doors which form part of the fire safety or security of the building
- Only parts of equal or better standard should be fitted as anything else could compromise the performance of the door. In the case of fire doors it could invalidate fire certificates.
- To comply with the requirements of BS EN179:2008 and BS EN1125:2008, emergency exit and panic exit devices should be subjected to routine maintenance checks at intervals of not more than one month by the owner or occupier or his approved representative.

Conclusion

The conclusion is that building owners/employers/occupiers should ensure that doors are kept in good working order by a properly documented regime of regular and appropriate maintenance, carried out by suitably qualified and competent individuals.

The most important factor is that the door and hardware is designed to protect human life and nothing should be done which could compromise this.

Building Control Officers may include such inspections in their regular fire drills and fire precaution inspections.

Simple checks that could save lives

Types of maintenance

Much of the routine maintenance recommended consists of a combination of visual and mechanical checks, cleaning and lubrication. Look out for the icons opposite which provide a 'quick glance' reminder of the maintenance required.

Visual checks

Primarily making a visual check on the product and surrounding door/frame looking for wear, damage, and general condition.

Functional checks

Consists of checking that the product operates properly without any binding or undue force required. Check that any seals or weatherstripping do not inhibit correct operation of the door.

Check fixings

Fixings need to be checked regularly and tightened when necessary. Check that no projection of fixings prevents the door from swinging freely.

Lubricating

Some products will benefit from periodic lubrication using a light machine oil or as instructed.

Cleaning

Build up of grease, dust and harmful chemicals (e.g from floor cleaning) should be removed to prevent corrosion and maintain the product finish.

Accessibility

Electromagnetic door controls and low energy operators are an essential part of providing accessibility. Routine checks should be carried out to ensure continued performance.

Door furniture

Lever handles require very little general maintenance.

Annually check for smooth operation and ensure the lever freely returns to the horizontal position. Ensure all fixings remain tight.

Annually check pull handles, bolts, door stops, signs and indicators paying particular attention to all fixings.

General cleaning procedures should be followed in accordance with the "Care of Finishes" on page 16.

Lockcases

The correct operation of your lock is important as it has a bearing on the correct functioning of fire doors.

Annual checks should be carried out in conjunction with checks on door closers and lever furniture to check operation and fixings.

Locks should not require lubrication during their lifetime. However, a light oil or WD40 can help in dusty environments.

Cylinders

Cylinders should require very little routine maintenance. Their operation should be checked as part of the procedure for checking mortice locks.

A small application of flaked graphite may be used in the keyway.

Routine care of finishes as necessary.

Door controls

When installed as part of a fire precaution system the door closing mechanism, including the door selector if used on a double door arrangement, should be checked in accordance with standing periodic fire testing procedures.

Electromagnetic hold-open units should be tested weekly in accordance with the procedures described in the "fire precautions (workplace) regulations 1997" or the "fire precautions (workplace) (amendment) regulations 1999".

Routinely check that all fixings of the closer body and bracket/track are tight.

Routine care of finishes as necessary.

Panic and emergency exit hardware

Specific maintenance checks must be carried out as required by BS EN1125:2008 (Panic Exit Devices) and BS EN179:2008 (Emergency Exit Devices), and as detailed in the relevant fixing instructions. Failure to carry out these checks will invalidate the certification.

At monthly intervals check correct functioning of the unit as part of the standing periodic fire test procedures. This should include the outside access device if fitted and the door selector if used on a pair of rebated double doors.

Routinely check that all fixings of the operating device, bolts and strikes are tight.

Routine care of finishes as necessary.

WEEKLY

General note:	Product type	Maintenance
These items should be checked weekly and adjustments made where necessary. To maintain the safety of the building's occupants all fire precaution hardware MUST be checked in accordance with the procedures described in the "Fire Precautions (workplace) regulations 1997" or the "Fire Precautions (workplace) Amendment Regulations 1999"	Overhead door closers and floor springs	Check correct functioning of the door closer and ensure that it closes the door fully into the closed/latched position from a variety of opening angles. See page 9 for further information and recommended routines Check door selector if fitted on rebated double door applications Under no circumstances should the door closer mechanism be dismantled.
	Electromagnetic door controls	Check correct functioning of the door closer and the ancillary equipment including the transformer/rectifier (power supply). The units must be tested in accordance with the procedures set out in the fire precautions regulations (see page 13). Any problems with the system must be rectified immediately

MONTHLY

General note:	Product type	Maintenance
In addition to the Weekly Schedule, these items should be checked on a monthly basis and adjustments made where necessary.	Panic exit devices and Emergency exit devices	Check correct functioning of the panic device, including the outside access device, in accordance with the standard periodic fire test procedures and ensure all keeps and sockets are free from obstruction. A specific test procedure should be carried out as detailed on pages 14 to 16. Any problems with the unit must be rectified immediately
	Flush bolts	Check for operation and make sure keeps are free from dirt (especially those built into the floor).
	All products	Check for build up of dirt and grease and keep clean as directed in the "Care of Finishes" section on page 16.

QUARTERLY

General note:	Product type	Maintenance
In addition to the Weekly and Monthly Schedule, these items should be checked on a quarterly basis and adjustments made where necessary.	Hinges	Check that all screw fixings are tight and apply a little light machine oil to the hinge knuckle as necessary.
	Panic exit devices	Check that all screw fixings are tight and lubricate the shoots or latch bolts, ensuring that they engage correctly in the keep/strike plate. Occasionally apply a little light machine oil to all pivot points. If necessary lubricate the cylinder keyway of the outside access device by applying a little flaked graphite or a WD40 type preparation.
	Door closers	Check that all screw fixings are tight and periodically apply a little light machine oil to the arm knuckle joint or roller guide (slide arm closers). Check the closing and latching speeds are correctly set to ensure the door closes fully into the frame.
	Floor springs	Apply a little light machine oil to all accessories (ie top centre and bottom pivot

Recommended schedules

ANNUALLY

General note:	Product type	Maintenance
	Locks, cylinders and lever furniture	Check that all screw fixings are tight including the lever retaining grub screws. Check levers operate smoothly and return fully to the horizontal position. Strike plates should be correctly located and adjusted to allow free movement of the bolts, locks, latches and cylinders should not normally need to be lubricated but if it is necessary to lubricate the keyway apply flaked graphite.
	Mortice roller catches	Ensure the roller bolt engages correctly in the keeper plate. If necessary adjust the tension of the roller bolt.
	Flush and barrel bolts	Check that all fixings are tight and apply a little light machine oil to the lever pivot or shoot component. Ensure the mechanism operates correctly and that any floor sockets are free from obstruction.
	General hardware (plates, signs & symbols, hooks, door stops)	Check that all fixings are tight and follow the recommended procedures for "Care of Finishes" on page 16.

LEVER FURNITURE

Provided it has been installed correctly and is used in conjunction with a suitable lockcase, your lever furniture should require only occasional checking and cleaning. Highly finished items which are regularly handled should be checked more frequently and kept clean.

The operation of the lever handles should be checked in association with checking the lockcase (see page 9).

MONTHLY

Check the lever furniture for dirt and grease and wipe clean as directed by the "Care of Finishes" on page 16.

ANNUALLY

Check that all fixings are tight (this may mean removing the snap on covers of roses) and that the levers are properly aligned each side of the door. Make sure the levers are firmly seated in the rose/plate and tighten the grub screw fixing into the spindle if necessary.

Check the operation of the lever handles ensuring that they operate smoothly and return to the horizontal position at all times.

Check the operation of thumbturns and indicator/emergency releases on bathroom locks ensuring they operate the deadbolt smoothly.

PULL HANDLES

MONTHLY

Check pull handles and push plates for dirt and grease and wipe clean as directed by the "Care of Finishes" on page 16.

ANNUALLY

Check that all fixings are tight on bolt through and back to back pull handles. On single bolt through pulls this may entail removing the push plate to access the fixing bolts. On back to back fixed pulls it may entail removing the inside handle in order to tighten the fixing bolts. Make sure the grub screw fixing of the inside handle on back to back assemblies are tight.

ACCESSORIES

ANNUALLY

Check all other items for dirt and grease and wipe clean as directed by the "Care of Finishes" on page 16.

Check that all fixings are tight.

MORTICE LOCKCASES

There are two principal types of mortice lock, cylinder locks and lever locks.

Cylinder locks are two part locks, having a separate locking cylinder which fits into the lockcase. The cylinder protrudes from one or both faces of the door and accepts the key which operates locking function.

Lever locks have the locking function and keyway integral with the lockcase.

Provided the lock and its hardware have been correctly installed and the door has not been distorted, the lock and hardware should not need to be adjusted or lubricated.

Primary components of the cylinder lock (opposite) are:

A - Forend (fixings may be concealed beneath a forend cover plate); B - Lockcase (cover should not be removed); C - Latchbolt; D - Follower; E - Deadbolt; F - Cylinder port (on bathroom locks this is replaced by a second follower which is operated by the thumbturn; G - Cylinder fixing screw.

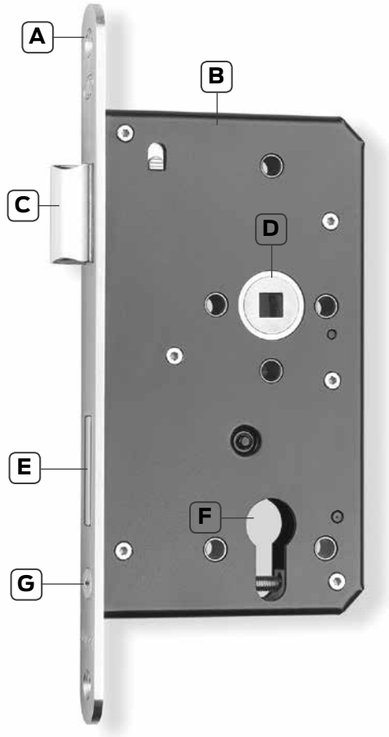

MONTHLY

Check lock forend and lever handles for dirt and grease and wipe clean as directed by the "Care of Finishes" on page 16.

ANNUALLY

Check that the latch and deadbolt (if appropriate) operate smoothly and that the levers return to the horizontal position.

Check that the latch and/or deadbolt locate fully into their strike plate. Any misalignment of the lock and the strike should be rectified immediately.

Check that the key enters the cylinder (or keyway on lever locks) smoothly and that the key (and thumbturn if fitted) operates the lock mechanism smoothly.

Check that fixings are tight on the lock and the lever furniture, including the grub screw fixing of the lever handles.

If necessary a small amount of light machine oil can be used around the shank of the levers.

Euro profile single

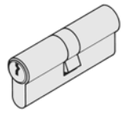

Euro profile double

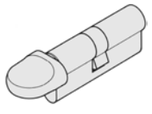

Euro profile cylinder & turn

Oval profile single

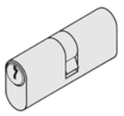

Oval profile double

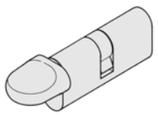

Oval profile cylinder & turn

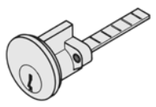

Rim cylinder

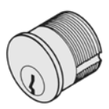

Rim mortice cylinder

CYLINDER MAINTENANCE

In most cases the cylinder should not need maintenance other than to check periodically that the keyway is clear and that the key (and thumbturn) operate smoothly.

A small amount of flaked graphite may be applied to the keyway if required.

CYLINDER REPLACEMENT

One of the primary advantages of the cylinder lock is that security can be quickly and easily reinstated if keys are lost or stolen. The cylinder can be replaced within seconds by removing the cylinder fixing screw (marked A below) and inserting a new cylinder (note: the cylinder screw may be concealed beneath the forend cover plate).

Replacement cylinders may need to be specially made to fit the masterkey system.

MASTERKEYED SYSTEMS

The term Master Keying refers to any organisation of a keyed locking system where there is a hierarchy of access, or where one key is required to operate several individual locks, each of which has its own operating key.

The Masterkey system can vary in complexity depending on its application and can involve many levels of masterkey or just a single masterkey.

To enable the construction of the masterkey system, Allegion use a lockchart which establishes the precise relationship of the cylinders to the access required, linked to architects' building plans. The lockchart should be kept safely by the building owner/occupier.

ORDERING REPLACEMENT KEYS

In order to supply replacement or additional keys you must supply the key reference code for unrestricted cylinders. For restricted cylinders such as the Briton 75-29 Series, you must also send a letter of authorisation with the key reference code.

ORDERING REPLACEMENT CYLINDERS

If keys are lost or stolen from a system of individual cylinders then security can be restored by replacing the individual cylinder or cylinders affected. However, if keys from a masterkeyed system are lost or stolen, replacing individual cylinders will not be effective.

OVERHEAD DOOR CLOSERS

In research, Allegion has identified that 95% of all problems associated with overhead door closers can be attributed directly to errors in installation rather than problems with the door closer itself. If the door is not closing properly into the frame you should first disconnect the door closer (disconnect the arm(s)) and determine that there is not an underlying problem with the door, frame or any smoke /draft seals that might be fitted.

The power of the door closer should not be used to overcome problems associated with the door or other items of hardware fitted to it.

Under no circumstances should the closer body be dismantled.

WEEKLY

Release the door from the fully open position and ensure that it closes fully into the frame. Ensure the latch (if fitted) engages fully into the strike plate. Repeat the process a few times from different angles of opening to ensure the door closes consistently each time.

Check and adjust the closing and latching speeds if necessary.

Check the backcheck (if fitted) comes into operation at the desired angle and readjust if necessary.

Check the delayed action (if fitted) and adjust the time delay if necessary.

Check that the door or hardware does not come into contact with the door frame or the surrounding structure.

Typical adjustments shown on Briton 2300 and 2400 door closers.

QUARTERLY

The fixings of the closer body and the bracket or slide track are subject to stress and should be checked carefully to make sure they are tight.

Periodically apply a little light machine oil to the moving joints of the arm and bracket or arm and slide track.

Check any fire and smoke seals to ensure they do not foul the action of the door.

Check for any loss of liquid from the door closer body which would indicate a failing device.

Clean the closer body, arms and bracket/track if necessary following the guidance on "Care of Finishes" on page 16.

FLOOR SPRINGS

Briton floor springs require very little general maintenance if fitted correctly. The long term durability of the floor spring is dependent on the accuracy of fitting and the durability of the door and frame construction.

Doors designated as being on a fire route exit have to be periodically inspected to make sure that they meet the same standards as when they were originally installed.

No regular maintenance is required but the test and inspections detailed below should be carried out to ensure the door and floor spring is operating correctly.

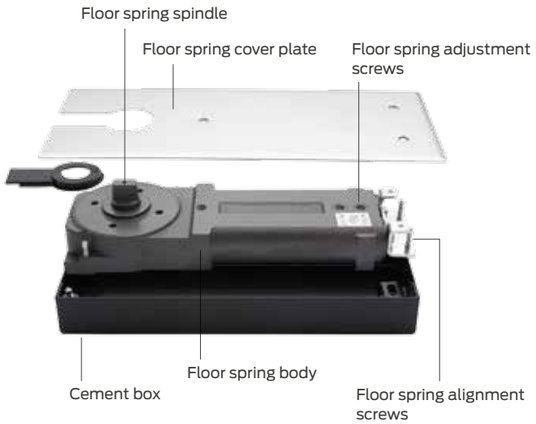

WEEKLY

Carefully inspect the lower pivot and remove any debris and corrosive liquids which may have been deposited. Inspect the upper pivot for any signs of wear. Failure to replace any worn pivots could result in the door jamming at critical times.

Test the operation of the floor spring and the door by releasing the door from the fully open position and ensure that the door closes fully into the frame and that the latch (if fitted) engages fully into the strike plate. Repeat the process a few times from different opening angles (and from both directions on double action doors) to ensure the door closes consistently each time.

Check that the door or hardware does not come into contact with the door frame or the surrounding structure.

Check that the door is not warped and that any seals are not preventing the door from closing properly.

The power of the floor spring should not be used to overcome problems associated with the door or other items of hardware fitted to it.

Briton 2800 single action floor spring with cover plate removed to provide access to adjustment and alignment screws.

Accessories for single action doors

Accessories for double action doors

QUARTERLY

Check that the floor spring mechanism is firmly located within the loose cement box and there is no movement of the mechanism.

Check the fixings of the top and bottom pivot are tight and apply a little light machine oil to the top and bottom pivots.

Make sure the pivot covers (if fitted on single action door accessories) and the floor spring cover plate are clean and free from dirt and grease as directed by the "Care of Finishes" on page 16.

ELECTROMAGNETIC HOLD-OPEN DEVICES

In situations where a fire door in a high traffic area is fitted with a door closer an electromagnetic hold-open device may be fitted which allows the door to be held open or allowed to swing free during normal use.

However, in the event of a fire, the electromagnetic hold-open device will be deactivated allowing the door to close under the action of the door closer.

- The system is powered by a 24v supply which is normally located close to the door either in the ceiling void or convenient cupboard
- The system must be connected to a separate smoke detection system and/or the building's fire alarm system

Above, door closers with integral electromagnetic hold-open function can be achieved with scissor arm or slide track closers

DEVICE OPTIONS

The hold-open device may be either incorporated into the door closer itself or as a separate hold-open unit which can be used in conjunction with any standard mechanical door closer.

WEEKLY

It is vitally important that the integrity of a fire door is maintained in the event of a fire. All electromagnetic hold-open devices and the ancillary equipment, including the transformer/ rectifier (power supply) must be tested weekly in accordance with the procedures set out in the fire precautions regulations.

It is recommended that the following procedure be followed:

- With the door in the hold-open position simulate the fire alarm activation and check that the door is released immediately and closes fully into the frame, fully engaging the latch if fitted. The fire alarm may be simulated in a number of ways including activation of a break glass unit or by a built-in test switch on the hold-open device.
- With the door in the hold-open position switch off the power to the hold-open devices to simulate power failure. The door should be released and close fully as above.
- With the door in the hold-open position check that the door can be pulled manually off the hold-open and close fully into the frame.

Wall mounted electromagnetic hold-open unit used in connection with a standard door closer.

ANY FAILURE OF THE DOOR TO CLOSE MUST BE RECTIFIED IMMEDIATELY

Firstly check that the failure is due to the electromagnetic device failing to release or whether the closing mechanism failed to close the door properly for some reason.

Electronic failure should be checked by a qualified technician to determine the fault.

if the closer fails to close the door properly please refer to the Door Closer or Floor Spring sections of this manual on page 11 and 12 for further information.

PANIC AND EMERGENCY EXIT HARDWARE

Briton panic and emergency exit hardware is available from either the Briton 376 Series or 560-570 Series. In checking, and in the event of making any adjustments, there are some significant variations between the systems and in the type of product which may be fitted to your door.

Panic Exit Hardware

All panic hardware installation will be operated by a horizontal "Push bar" or "Touch bar" which runs across the width of the door. The operating bar will be used to operate anything from a single rim latch (pic. 1) to multipoint side or top/bottom latches (pic. 5 and 6).

Top and bottom latches on Briton 376 panic exit hardware is operated by solid rods which are connected to the operating bar (pic. 2). Latches on Briton 560-570 Series devices are operated by adjustable cables (pic. 7)

Emergency Exit Hardware

Operation is by a "Push pad" which may be connected to a single latch (pic. 8) or with vertical bolts and latches (pic. 4).


[1]


[2]


[3]


[4]


[5]


[6]


[7]


[8]

KEY to illustrations

1. Briton 378 rim latch panic exit device.
2. Briton 376 panic exit bolt
3. Briton 379.N panic exit device with mortice nightlatch
4. Briton 372 emergency exit "Push pad" with vertical bolts
5. Briton 570 series "Touch bar" with side acting pullman latches (3 point latching)
6. Briton 560 series with top and bottom pullman latches (3 point latching)
7. Briton 560 series cable adjusters
8. Briton 581 emergency exit device with single point rim latch

Specification hardware - Panic and emergency exit hardware

MAINTENANCE AND CHECKING FUNCTION

In view of the important role the panic and emergency exit device plays in maintaining the safety and security of your building and its occupants, it is recommended that routine maintenance checks are carried out at intervals of not more than 1 month by the occupier or their approved representative.

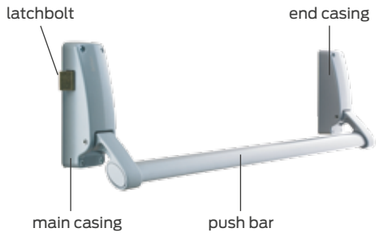

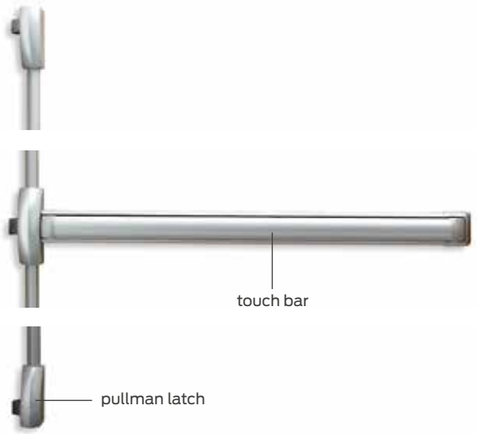

MONTHLY

Briton panic exit devices must be fitted to comply with the requirements of EN 1125 which states that the device should be easily operated by hand or body pressure in a panic situation. We suggest the following checks be made on all panic and emergency exit hardware:

- Inspect and operate the device to ensure all the components are in satisfactory working condition and operate as follows:
  a. After being pushed the 'Push bar' or 'Touch bar' should return automatically to its initial position.
  b. When pushed from the end casing side (hinge side of door) the latchbolt(s) should completely withdraw from their strikes as if it were pushed from the main casing side.

     Immediate exit must be permitted.
  c. With the door closed, the latchbolts should be fully engaged into their strikers. They should not withdraw if pushed but should only withdraw if operated by the 'Push bar' or 'Touch bar'. The only exception to this is the additional side pullman latch available for the Briton 560-570 Series.
  d. If necessary upper and lower, or side pullman latches can be adjusted to ensure the accuracy of latching.

- Inspect strikers and ensure they are clean and free from obstruction.
- Ensure the door closes fully into the frame and there are no obstructions.
- Check that the door has not become distorted in any way. If the door does not meet the frame stops and cannot be pulled in by the door closer the door may need to be replaced.
- Check that the door hinges are operating smoothly and lubricate if necessary.
- Check that the latches are operating freely. If necessary remove the end box covers and/or pullman latch covers and lubricate if necessary.
- Check that all fixings are tight.

MATERIALS AND FINISHES

All Briton products have a high quality polished finish, including those with a powder coated finish. In order to maintain the quality of the finish we recommend products are generally kept clean. Cleaners which have a scouring or abrasive action should never be used as this will damage the surface finish. For general cleaning the following methods are recommended.

SATIN STAINLESS STEEL

Regular dusting and periodic washing with a mild solution of washing detergent and warm water. Dry and polish with a soft cloth. No additional treatment is required.

POLISHED STAINLESS STEEL

Regular dusting and periodic washing with a mild solution of washing detergent and warm water. Dry and polish with a soft cloth. No additional treatment is required.

ANODISED ALUMINIUM

Regular dusting and periodic washing with a mild solution of washing detergent and warm water. Dry and polish with a soft cloth. Silicon wax furniture cream may be applied with a soft cloth after cleaning for protection.

POLISHED & LACQUERED BRASS

Regular washing with a mild solution of washing detergent and warm water. Dry and polish with a soft cloth. Silicon wax furniture cream may be applied with a soft cloth after cleaning for protection.

NYLON MATERIAL

Nylon material should be washed regularly with a mild washing detergent and warm water and dried with a clean soft cloth. Wipe over with an anti-static application.

POWDER COATED TREATMENTS ON METAL

Regular dusting and periodic washing with a mild solution of washing detergent and warm water. Dry and polish with a soft cloth. No additional treatment is required.

NOTES